2040851

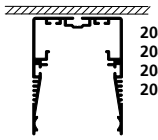

2040827-9
2041182-4
2044144-9
2057322-7

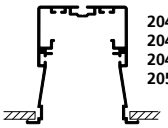

2040826 2041181
2041189-92
2044138-43
2057316-21

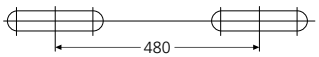

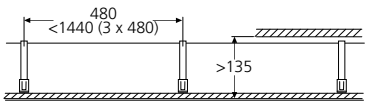

1

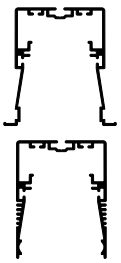

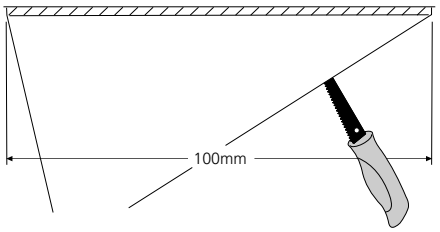

2

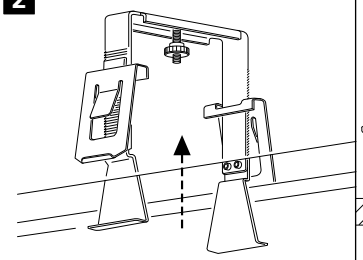

3

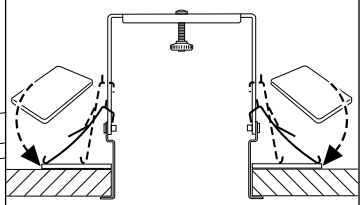

4

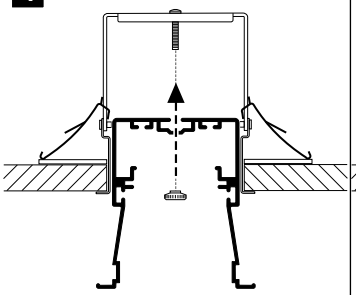

5

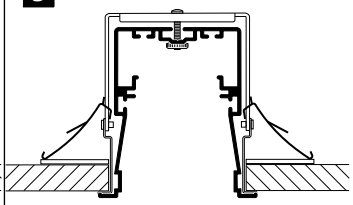

?

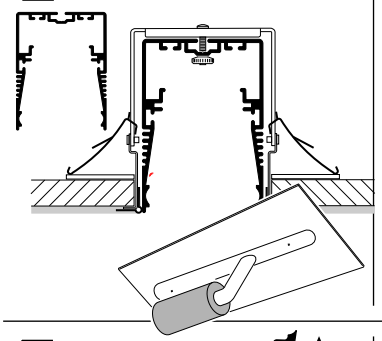

1

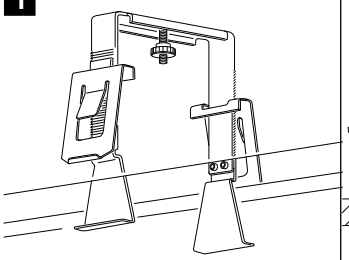

2

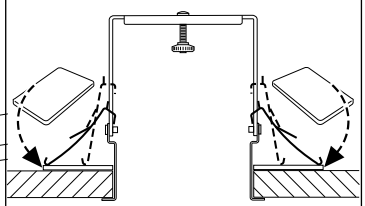

3

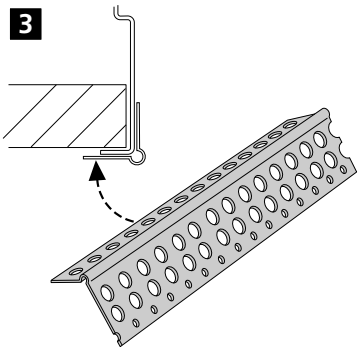

4

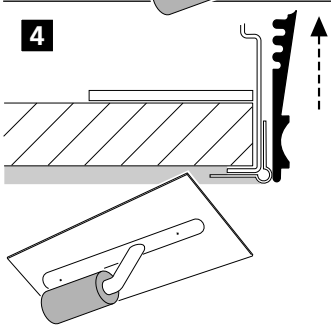

© Concord Lighting Limited 03.14