Mini Continuum - Recessed Mounting Bracket

IS**1506B**

2054909

2054872-2054877
2054881-2054886
2054890-2054895
2054899-2054904
2055080-2055084
2055088-2055093
2055097-2055102
2055106-2055111
2093115-2093154

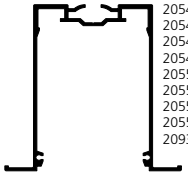

2054878-2054880
2054887-2054889
2054896-2054898
2054905-2055079
2055085-2055087
2055094-2055096
2055103-2055105
2055112-2055114
2093127-2093138

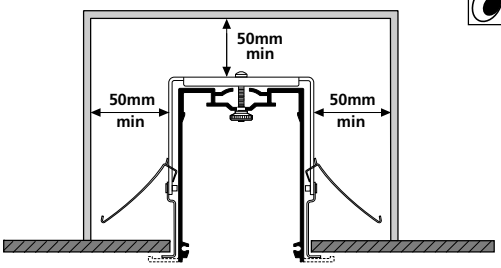

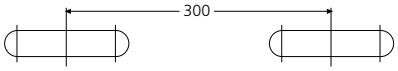

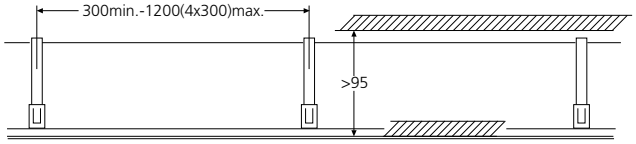

1

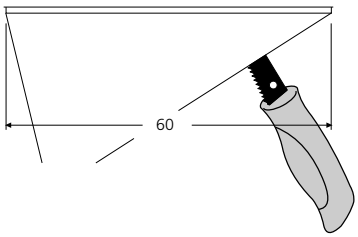

2

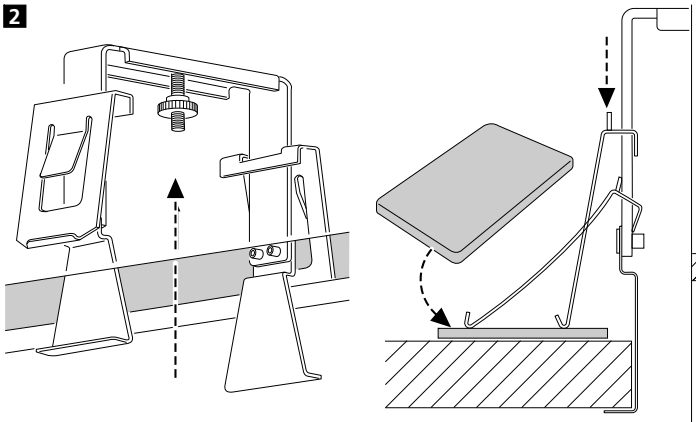

3

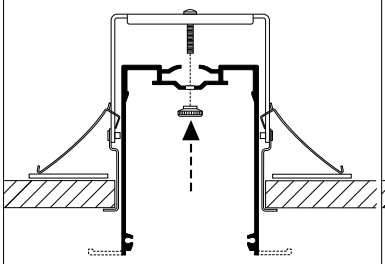

4

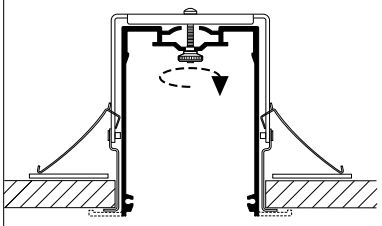

?

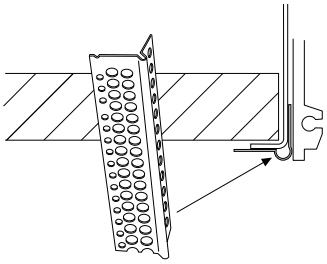

5

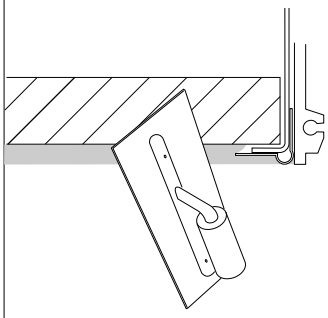

Concord

Havells Sylvania Europe LTD
Avis Way, Newhaven East Sussex BN9 OED UK
www.havells-sylvania.com

EM539002 FM01687

© Concord Lighting Limited 11.15