RANA Linear - Surface & Suspended

IS**1923**F

IS1980 | IS500 | 230-240V~ 50/60Hz | IP20 | IK07

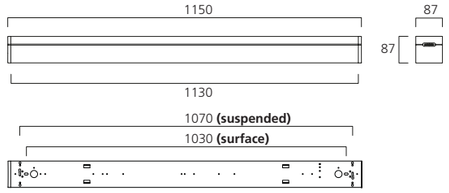

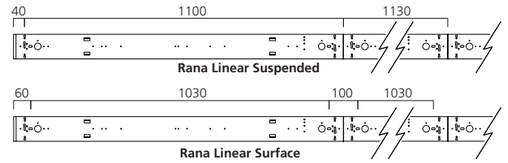

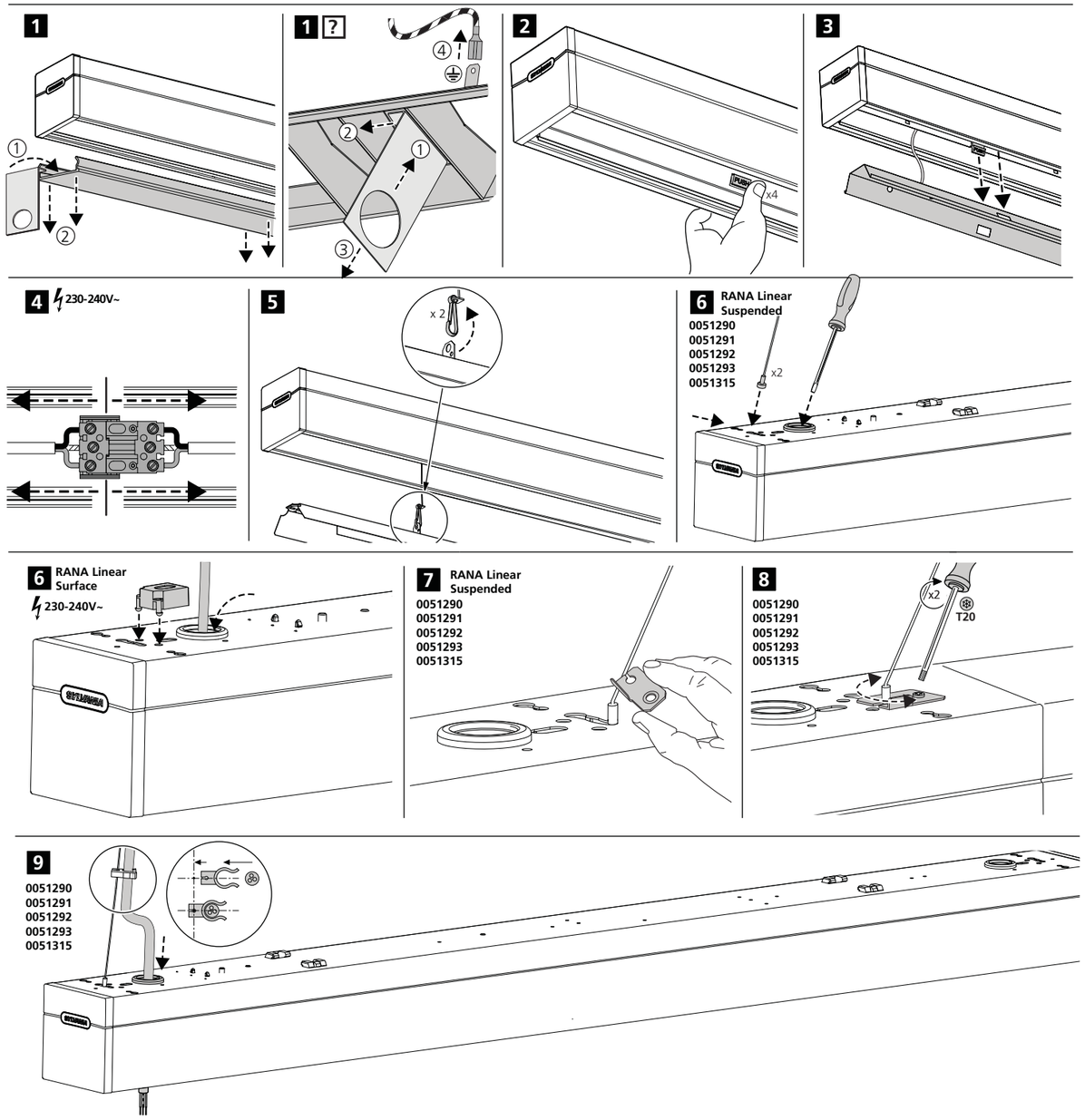

SYLVANIA

Feilo Sylvania Europe LTD
Avis Way, Newhaven East Sussex BN9 OED UK
www.feilosylvania.com

10.16

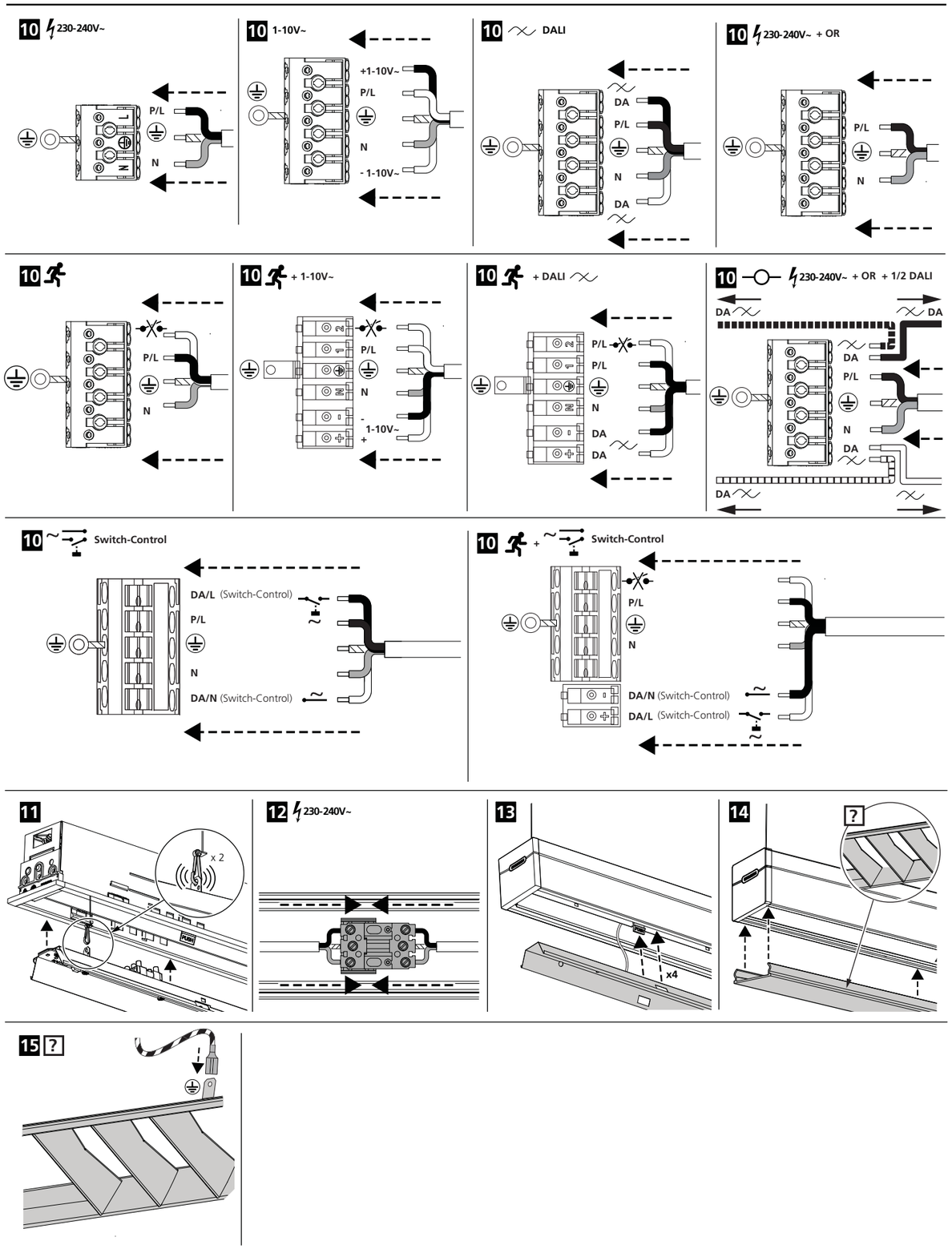
10 230-240V~
P/L
N
10 1-10V~
+1-10V~
P/L
N
- 1-10V~
10 DALI
DA
P/L
N
DA
10 230-240V~ + OR
P/L
N
10
P/L
N
10 + 1-10V~
P/L
N
- 1-10V~ +
10 + DALI
P/L
P/L
N
DA
DA
10 230-240V~ + OR + 1/2 DALI
DA
DA
DA
P/L
N
DA
DA
10 Switch-Control
DA/L (Switch-Control)
P/L
N
DA/N (Switch-Control)
10 + Switch-Control
P/L
N
DA/N (Switch-Control)
DA/L (Switch-Control)
11
x 2
12 230-240V~
13
x4
14
?
15 ?

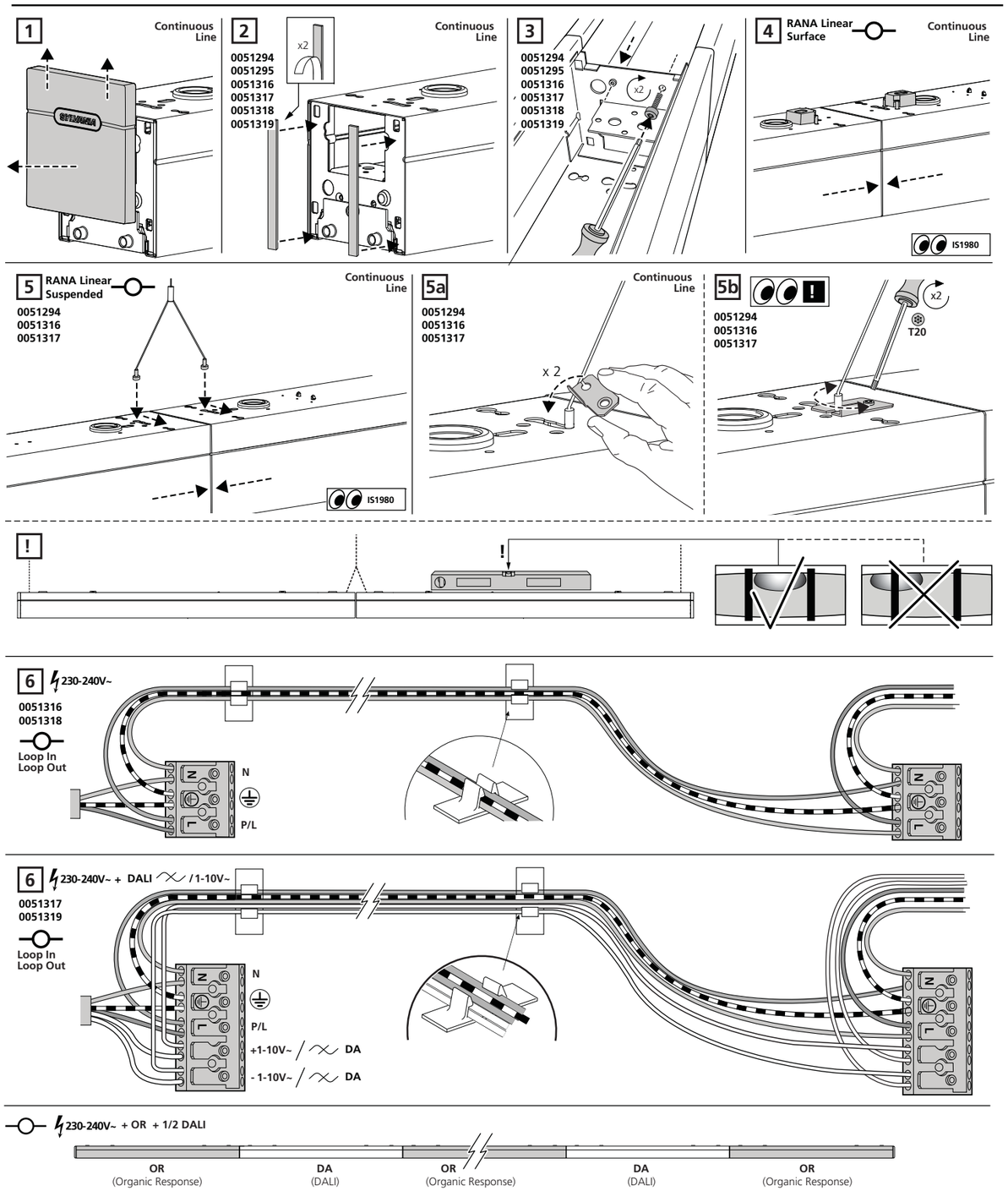
1
Continuous Line
2
Continuous Line
x2
0051294
0051295
0051316
0051317
0051318
0051319
3
0051294
0051295
0051316
0051317
0051318
0051319
x2
4 RANA Linear Surface
Continuous Line
IS1980
5 RANA Linear Suspended
Continuous Line
0051294
0051316
0051317
IS1980
5a
Continuous Line
0051294
0051316
0051317
x 2
5b
0051294
0051316
0051317
x2
T20
!
!
6 230-240V~
0051316
0051318
Loop In
Loop Out
N
P/L
6 230-240V~ + DALI / 1-10V~
0051317
0051319
Loop In
Loop Out
N
P/L
+1-10V~ / DA
- 1-10V~ / DA
230-240V~ + OR + 1/2 DALI
OR
(Organic Response)
DA
(DALI)
OR
(Organic Response)
DA
(DALI)
OR
(Organic Response)