IS1600 | IS500 | 230-240V~ 50/60Hz

Trimless

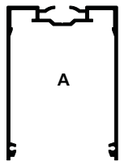

2093115-2093126
2093139-2093154
2093158-2093159
2093162-2093163

+Trim

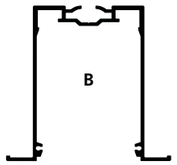

2093127-2093138
2093160-2093161
2093164-2093165

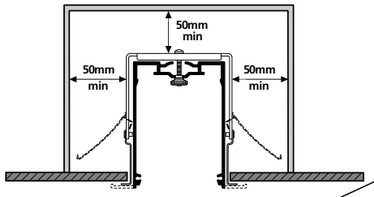

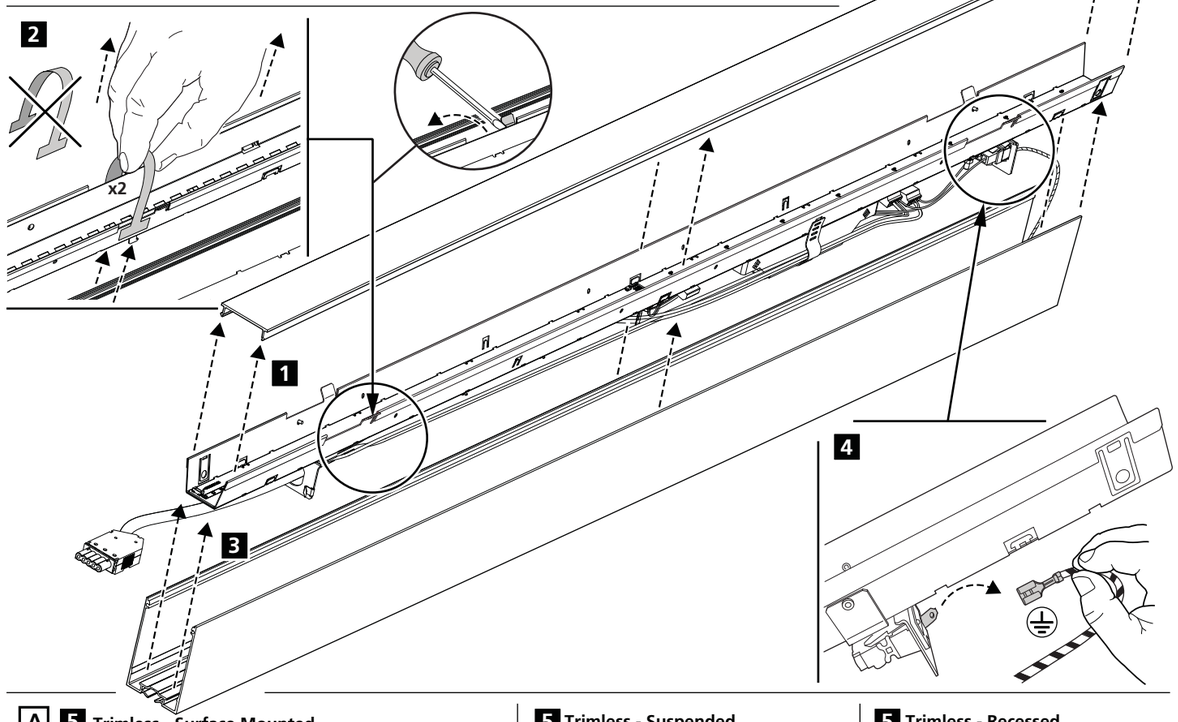

A **5** **Trimless - Surface Mounted**

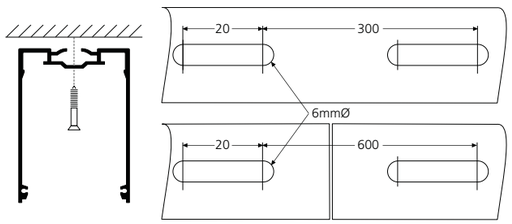

5 **Trimless - Suspended**

2035020
2035022-3
2035025-6

IS1045

2035015-6
2035018
2035031

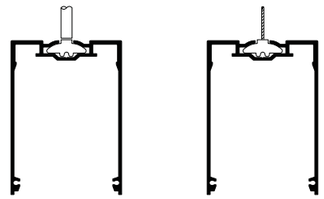

5 **Trimless - Recessed**

2054909

IS1506

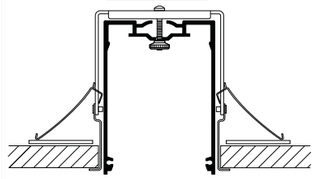

B **5** **+Trim - Recessed/Suspended**

2035020
2035022-3
2035025-6

IS1045

2035015-6
2035018
2035031

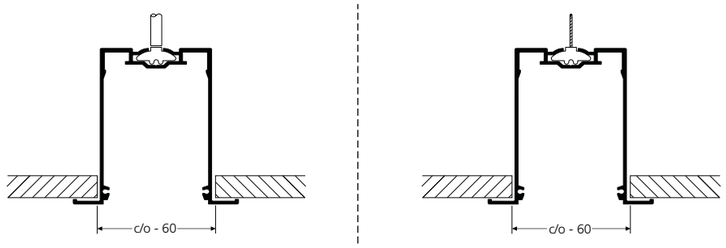

5 **+Trim - Recessed**

2054909

IS1506

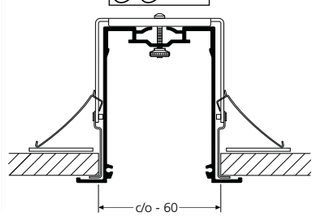

Concord

Havells Sylvania Europe LTD
Avis Way, Newhaven East Sussex BN9 OED UK
www.havells-sylvania.com

EM539002 FM01687

© Concord Lighting Limited 01.16

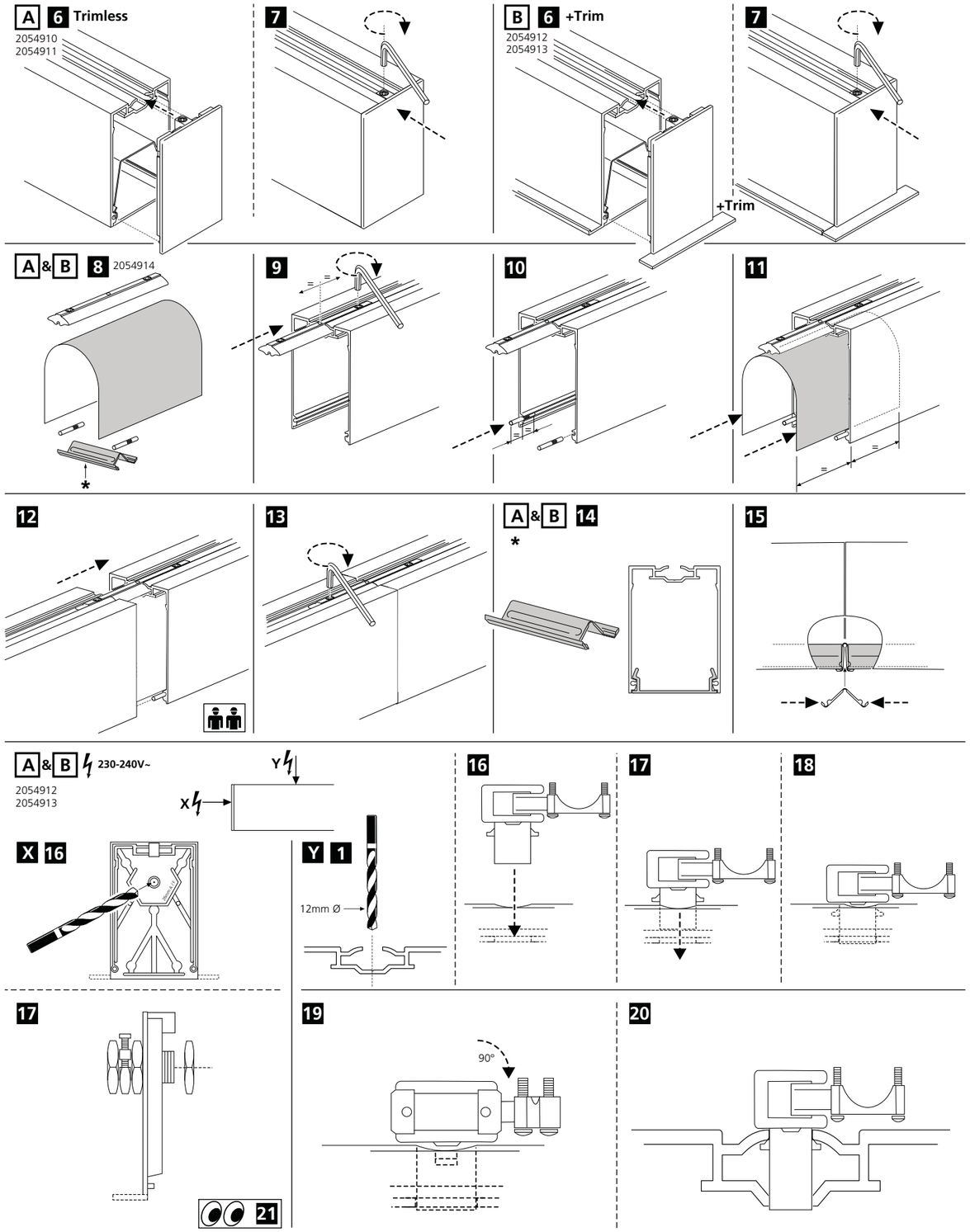
A 6 Trimless
2054910
2054911
7
B 6 +Trim
2054912
2054913
+Trim
7
A & B 8 2054914
*
9
10
11
12
13
A & B 14
*
15
A & B 230-240V~
2054912
2054913
Y
X
X 16
Y 1
12mm Ø
16
17
18
17
19
90°
20
21

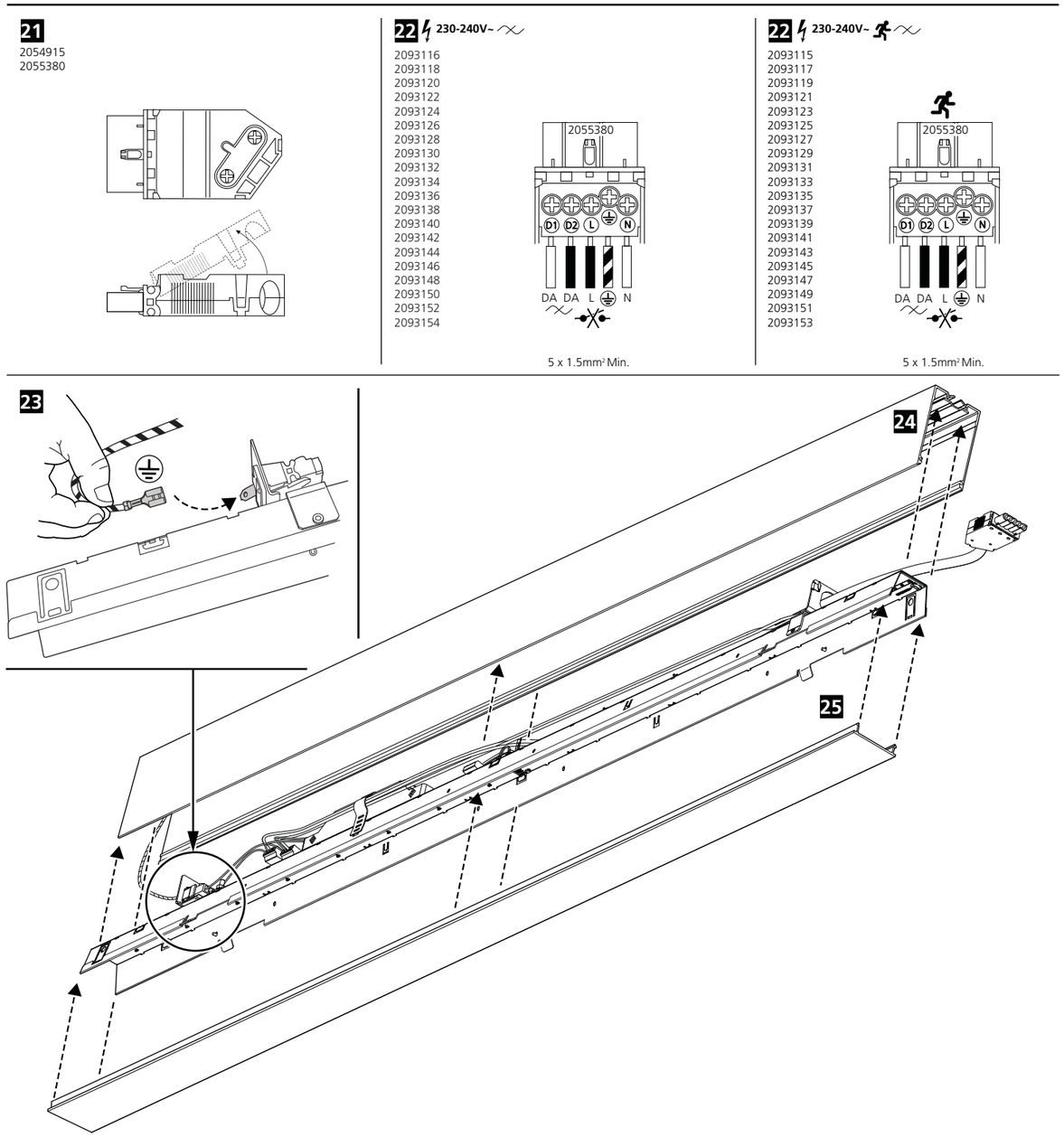
21
2054915
2055380
22 230-240V~
2093116
2093118
2093120
2093122
2093124
2093126
2093128
2093130
2093132
2093134
2093136
2093138
2093140
2093142
2093144
2093146
2093148
2093150
2093152
2093154
2055380
D1 D2 L N
DA DA L N
5 x 1.5mm² Min.
22 230-240V~
2093115
2093117
2093119
2093121
2093123
2093125
2093127
2093129
2093131
2093133
2093135
2093137
2093139
2093141
2093143
2093145
2093147
2093149
2093151
2093153
2055380
D1 D2 L N
DA DA L N
5 x 1.5mm² Min.
23
24
25